Netzer
Precision Position Sensors

ABSOLUTE POSITION
ROTARY ELECTRIC ENCODER™

USER MANUAL | DF-60

DF-60-UM-V02

Copyright © 2020 Netzer Precision Position Sensors A.C.S. Ltd. All rights reserved.

Table of Contents

1. Preface 2
   1.1 Version: 2.0 Mar. 2020 2
   1.2 Applicable documents 2
2. ESD protection 2
3. Product overview 2-3
   3.1 Overview 2
   3.2 Installation flow chart 2
   3.3 Encoder mounting 3
4. Unpacking 4
   4.1 Standard order 4
5. Electrical interconnection 4
   5.1 Absolute position over SSi or BiSS-C 4
   5.2 Setup mode over NCP 4
   5.3 Electrical connection and grounding 4
6. Software installation 4
   6.1 Minimum requirements 4
   6.2 Installing the software 4
7. Mounting verification 5
   7.1 Starting the Encoder Explorer 5
   7.2 Mechanical installation verification 5
8. Calibration 5-7
   8.1 Offset calibration 5
   8.2 CAA calibration 6
   8.3 Setting the encoder zero point 7
   8.4 Jitter test 7
9. Operational mode 7
   9.1 SSi / BiSS 7
10. Mechanical drawings 8-9

1. Preface

1.1 Version: 2.0 Mar. 2020

1.2 Applicable documents

- DF-60 Electric Encoder data sheet

2. ESD protection

As usual for electronic circuits, during product handling do not touch electronic circuits, wires, connecters or sensors without suitable ESD protection. The integrator / operator shall use ESD equipment to avoid the risk of circuit damage.

ATTENTION

OBSERVE PRECAUTIONS FOR HANDLING ELECTROSTATIC SENSITIVE DEVICES

3. Product overview

3.1 Overview

The DF-60 absolute position Electric Encoder™ is a revolutionary position sensor originally developed for harsh environment critical applications. Currently it performs in a broad range of applications, including defense, homeland security, aerospace, and medical and industrial automation.

The Electric Encoder™ non-contact technology relies on an interaction between the measured displacement and a space/ time modulated electric field.

The DF-60 Electric Encoder™ is semi-modular, i.e., its rotor and stator are separate.

(1) Encoder stator

(2) Encoder rotor

(3) Stator mounting ears

(4) Encoder cable

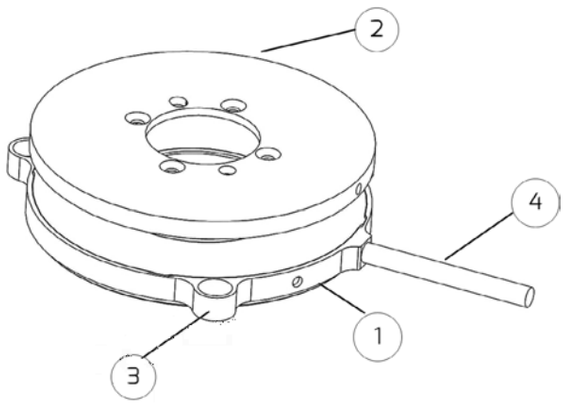

3.2 Installation flow chart

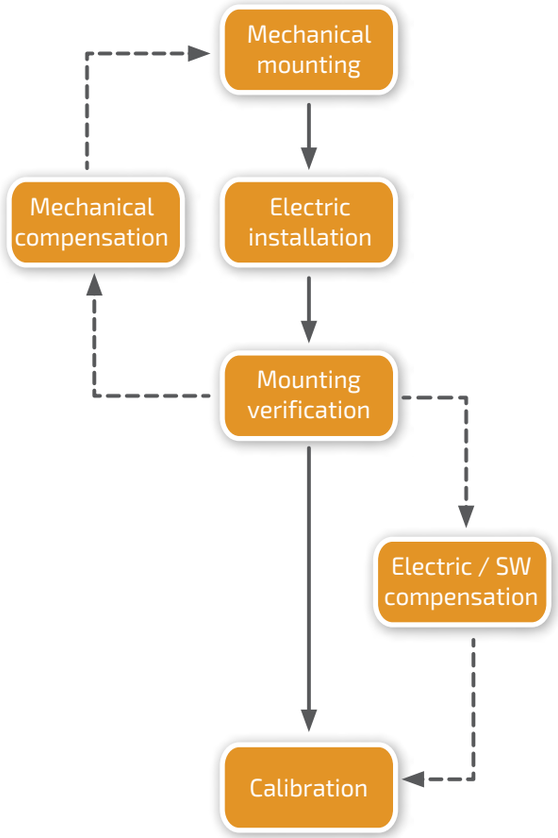

3.3 Encoder mounting

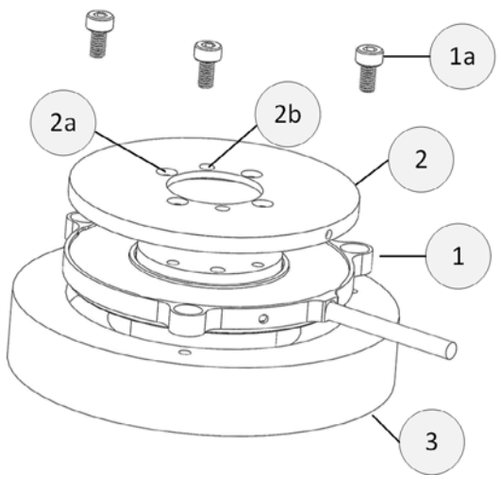

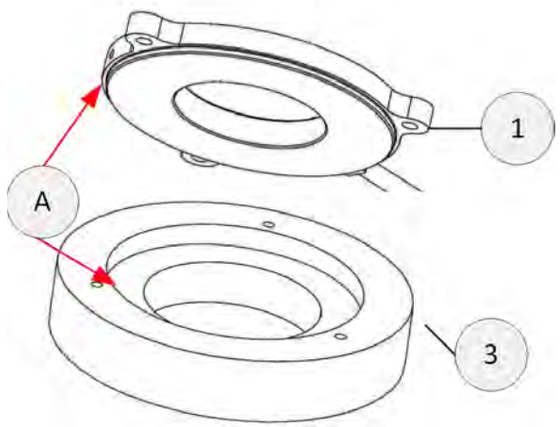

Typical encoder installation includes:

- Encoder stator **(1)** – Encoder stator
- Stator mounting screws **(1a)** Socket Head Cup Screw, M3 x 6 mm,SS, DIN912
- Encoder rotor **(2)** –Encoder rotor
- Rotor shaft mounting hole **(2a)** Socket Head Countersunk Screw, M2x4mm, SS, Din 7991 and centralization pin **(2b)**
- Encoder Seating / stator (host machine) **(3)**

The encoder stator is connected to the application static section and should be centralized by the circumference step (A) and fixed by [3] three screws (1a), the encoder rotor should be fixed by [4] four screws (1A) and centralized by 2 pins (2b).

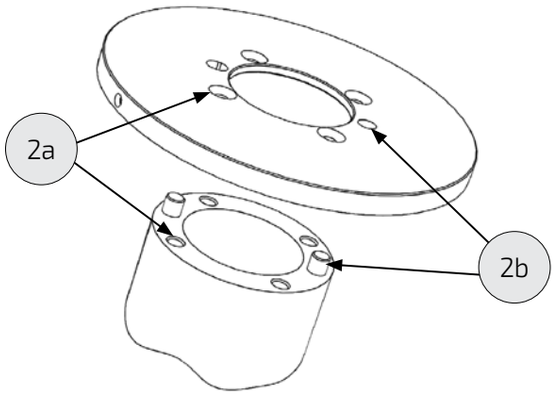

Encoder stator / Rotor relative position

For proper performance the air gap should be 0.6mm +/- 0.1mm.

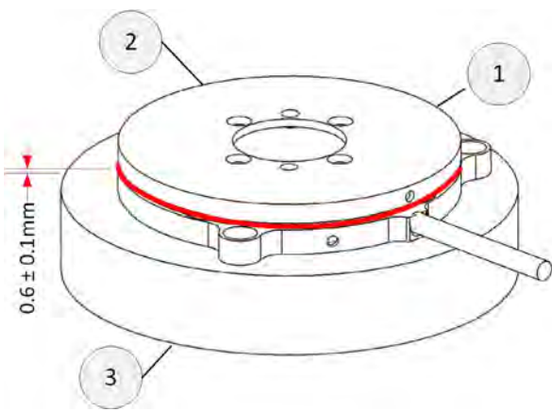

The optimal recommended amplitude values are middle of the range according to those shown in the Encoder Explorer software and vary according to the encoder type.

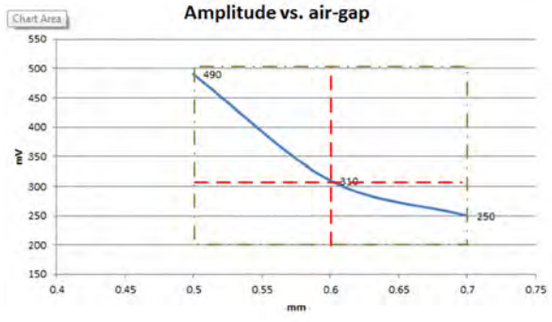

Encoder stator / Rotor relative position

For proper performance the air gap should be 0.6mm +/- 0.1mm.

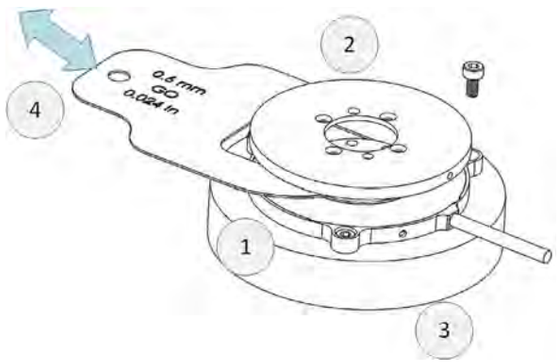

Air-gap of 0.6mm can be measured by standard filler gauge or Netzer CAT No. MP-01014 filler gauge.

Verify proper rotor mounting with the Encoder Explorer tools "Signal analyzer" or "Mechanical installation verification."

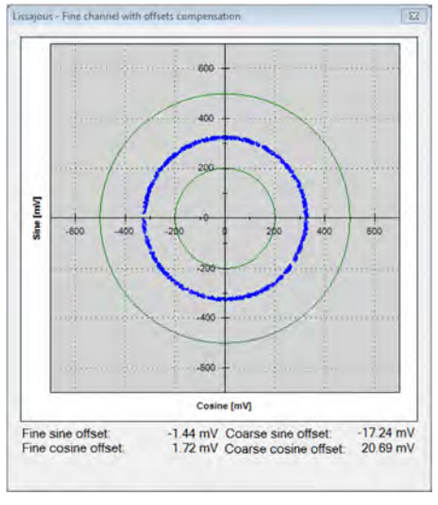

Note: for more information please read paragraph 6

4. Unpacking

4.1 Standard order

The package of the standard DF-60 contains the encoder with 250mm shildedd cable AWG30.

Optional accessories:

(1) **CNV-00003**, RS-422 to USB converter (with USB internal 5V power supply path).

(2) **NanoMIC-KIT-01**, RS-422 to USB converter with full digital interface for both NCP & high speed SSI/Biss and AqB (with USB internal 5V power supply path).

(3) **DKIT-DF-60-32-SG-S0**, Mounted SSi encoder on rotary jig, RS-422 to USB converter and cables.

(4) **DKIT-DF-60-32-IG-S0**, Mounted BiSS encoder on rotary jig, RS-422 to USB converter and cables.

5. Electrical interconnection

This chapter reviews the steps required to electrically connect the encoder with digital interface (SSi or BiSS-C).

Connecting the encoder

The encoder has two operational modes:

5.1 Absolute position over SSi or BiSS-C:

This is the power-up default mode

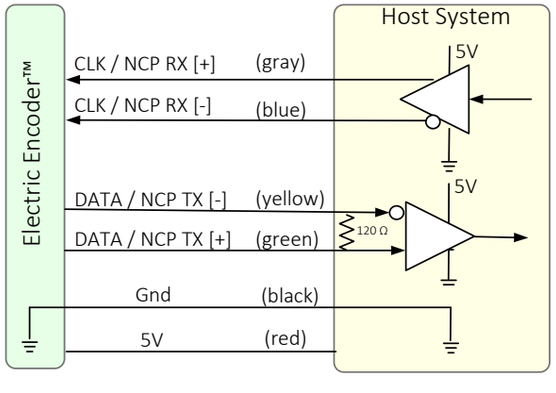

SSi / BiSS interface wires color code

Clock +	Grey	Clock
Clock -	Blue	
Data -	Yellow	Data
Data +	Green	
GND	Black	Ground
+5V	Red	Power supply

5.2 Setup mode over NCP (Netzer Communication Protocol)

This service mode provides access via USB to a PC running Netzer Encoder Explorer application (on MS Windows 7/10). Communication is via Netzer Communication Protocol (NCP) over RS-422 using the same set of wires.

Use the following pin assignment to connect the encoder to a 9-pin D-type connector to the RS-422/USB converter CNV-0003 or the NanoMIC.

Electric encoder interface, D Type 9 pin Female

Description	Color	Function	Pin No
SSi Clock / NCP RX	Gray	Clock / RX +	2
	Blue	Clock / RX -	1
SSi Data / NCP TX	Yellow	Data / TX -	4
	Green	Data / TX +	3
Ground	Black	GND	5
Power supply	Red	+5V	8

5.3 Electrical connection and grounding

The encoder does NOT come with specified cable and connector, however, do observe grounding consideration:

[1] The cable shield does not connect to the power supply return line.

[2] Ground the host shaft to avoid interference from the host system, which could result in encoder internal noise.

Note: 4.75 to 5.25 VDC power supply required

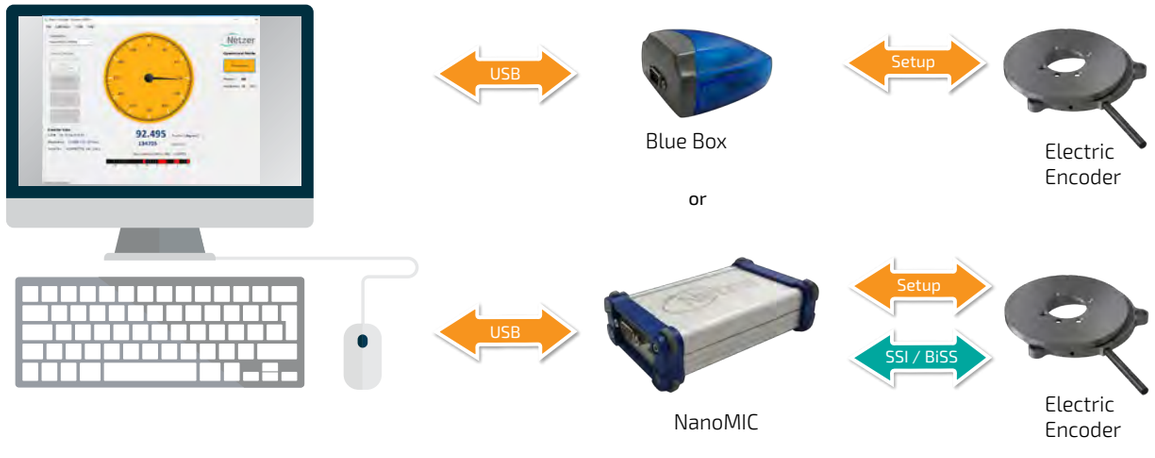

Connect Netzer encoder to the converter, connect the converter to the computer and run the Electric Encoder Explorer Software Tool

6. Software installation

The Electric Encoder Explorer (EEE) software:

- Verifies Mechanical Mounting Correctness
- Offsets Calibration
- Sets up general and signal analysis

This chapter reviews the steps associated with installing the EEE software application.

6.1 Minimum requirements

- Operating system: MS windows 7/ 10, (32 / 64 bit)
- Memory: 4MB minimum
- Communication ports: USB 2
- Windows .NET Framework, V4 minimum

6.2 Installing the software

- Run the Electric Encoder™ Explorer file found on Netzer website: Encoder Explorer Software Tools
- After the installation you will see **Electric Encoder Explorer software icon** on the computer desktop.
- Click on the Electric Encoder Explorer software **icon** to start.

7. Mounting verification

7.1 Starting the Encoder Explorer

Make sure to complete the following tasks successfully:

- Mechanical Mounting
- Electrical Connection
- Connecting Encoder for Calibration
- Encoder Explore Software Installation

Run the Electric Encoder Explorer tool (EEE)

Ensure proper communication with the encoder: (Setup mode by default).

(a) The status bar indicates successful communication.

(b) Encoder data displays in the encoder data area. (CAT No., Serial No.)

(c) The position dial display responds to shaft rotation.

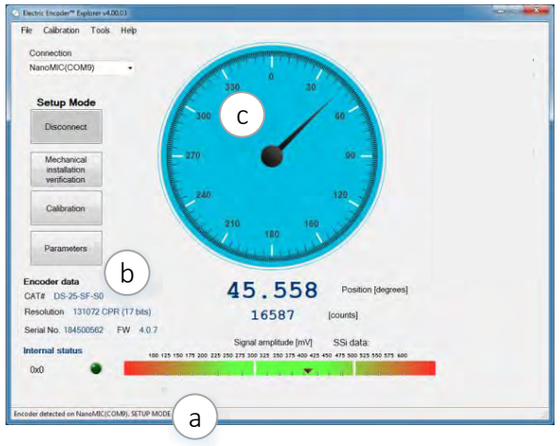

Perform mounting verification & rotation direction selection before calibration to ensure optimal performance.

It is also reccomended to observe the instaletion at the [Tools - Signal Analizer] window.

7.2 Mechanical installation verification

The Mechanical Installation Verification provides a procedure that will ensure proper mechanical mounting by collecting raw data of the fine and coarse channels during rotation.

(d) Select [Mechanical Mounting Verification] on the main screen.

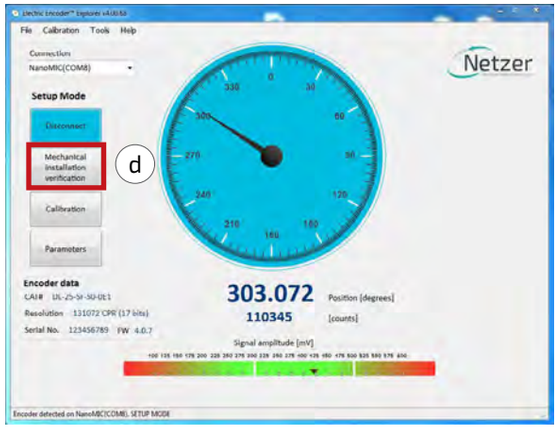

(e) Select [Start] to initiate the data collection.

(f) Rotate the shaft in order to collect the fine and coarse channels data.

(g) At the end of a successful verification, the SW will show "Correct Mechanical Installation."

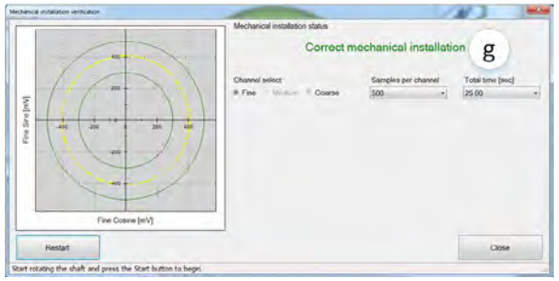

(h) If the SW indicates "Incorrect Mechanical Installation," correct the mechanical position of the rotor, as presented in paragraph 3.3 - "Rotor Relative Position."

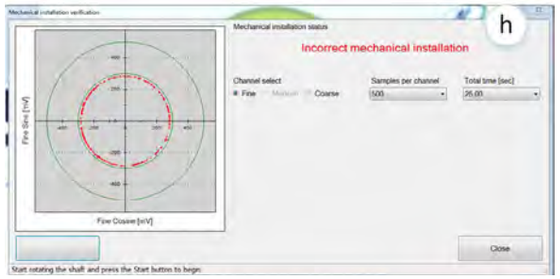

8. Calibration

8.1 Offset calibration

For optimal performance of the Electric Encoders, the inevitable DC offset of the sine and cosine signals must be compensated over the operational sector.

After successfully completing the Mounting Verification procedure:

(a) Select [Calibration] on the main screen.

(b) Start the data acquisition while rotating the shaft.

The progress bar (c) indicates the collection progress.

Rotate the axis consistently during data collection-covering the working sector of the application end to end-by default the procedure collects 500 points over 75 seconds. Rotation speed is not a parameter during data collection. Data collection indication shows for the fine/coarse channels, a clear "thin" circle appears in the center (d) (e) with some offset.

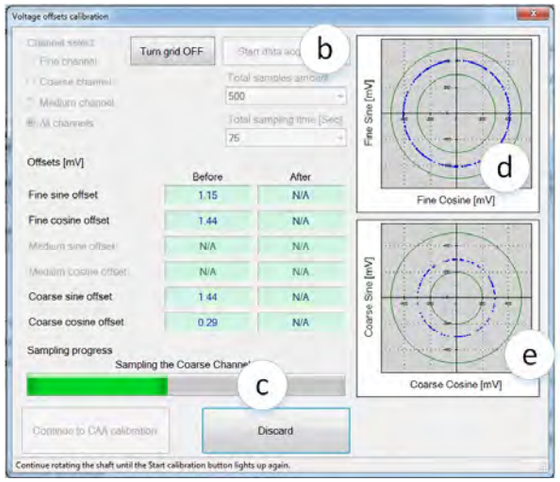

Offset compensated fine / Corse channel

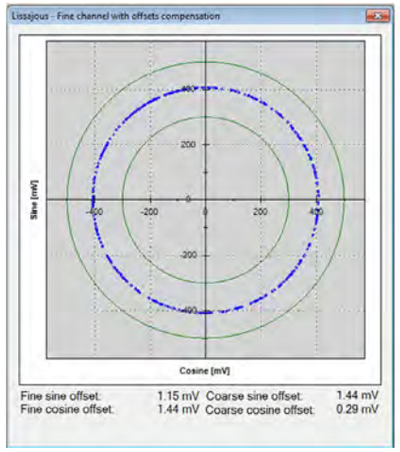

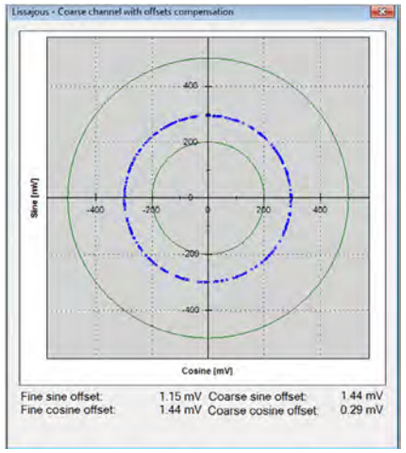

8.2 CAA calibration

The following calibration aligns the coarse/ fine channel by collecting data from each point of both channels.

Select [Continue to CAA Calibration]

In the CAA angle calibration window, select the relevant option button from the measurement range options (a):

- Full mechanical rotation – shaft movement is over 10deg - recommended.
- Limited section – define operation of the shaft in a limited angle defined by degrees in case of <10deg
- Free sampling modes - define the number of calibration points in the total number of points in the text box. The system displays the recommended number of points by default. Collect a minimum of nine points over the working sector.
- Click the [Start Calibration] button (b)
- The status (c) indicates the next required operation; the shaft movement status; the current position, and the next target position to which the encoder should be rotated.
- Rotate the shaft/encoder to the next position and click the [Continue] button (c) - the shaft should be in STAND STILL during the data collection. Follow the indication/ interactions during the cyclic process for positioning the shaft --> stand still --> reading calculation.
- Repeat the above step for all defined points. Finish (d).
- Click the [Save and Continue] button (e).

The last step saves the offsets CAA parameters, completing the calibration process.

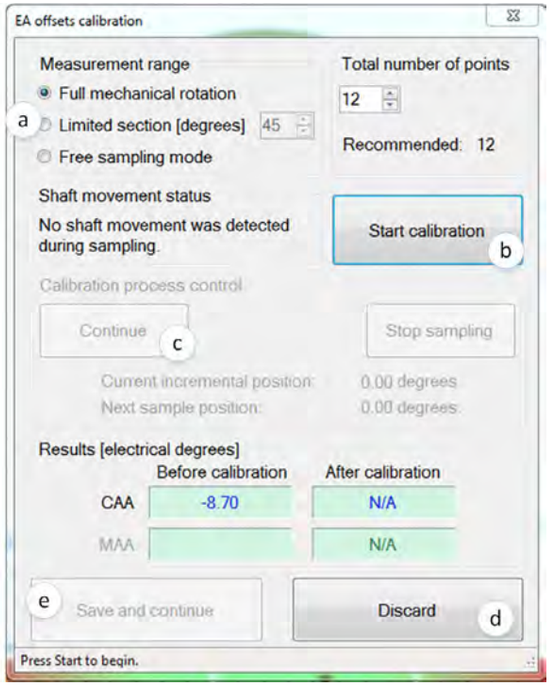

8.3 Setting the encoder zero point

The zero position can be defined anywhere in the working sector. Rotate the shaft to the desired zero mechanical position.

Go into "Calibration" button at the top menu bar, press "Set UZP".

Select "Set Current Position" as zero by using the relevant option, and click [Finish].

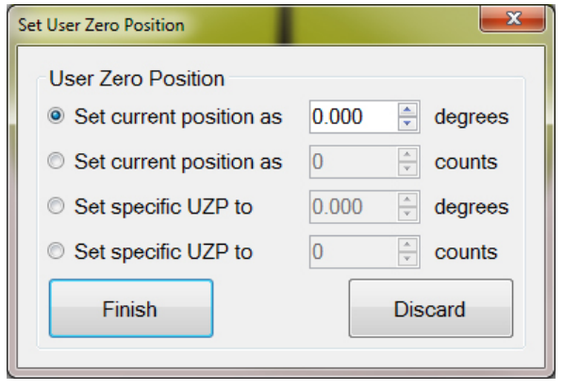

8.4 Jitter test

Perform a jitter test to evaluate the quality of the installation; the jitter test presents the reading statistics of absolute position readings (counts) over time. Common jitter should be up +/- 3 counts; higher jitter may indicate system noise.

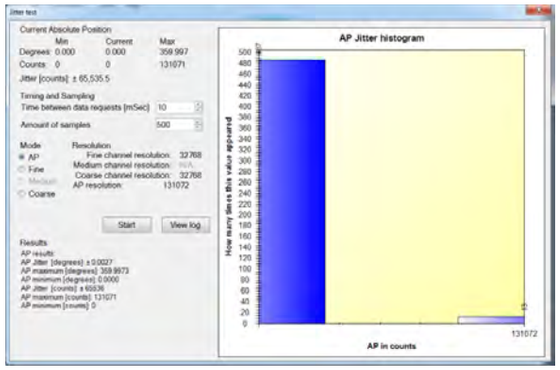

In case the reading data (blue dots) are not evenly distributed on a thin circle, you may experience "noise" in your installation (check shaft/stator grounding).

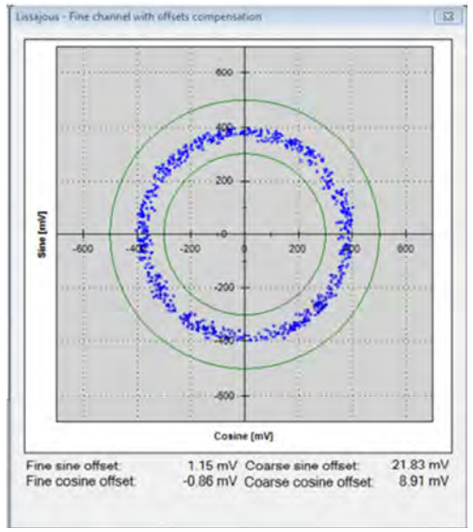

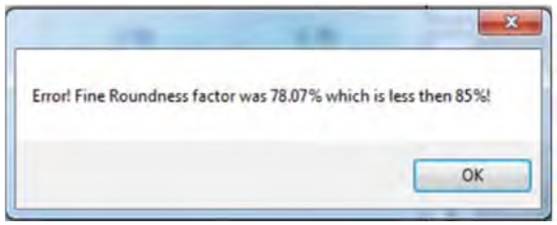

9. Operational Mode

9.1 SSi / BiSS

Operational mode indication of the SSi / BiSS Encoder interface available by using the NanoMIC.

For more information read about NanoMIC on Netzer website

The operational mode presents the "real" SSi / BiSS interface with 1MHz clock rate.

Protocol SSi

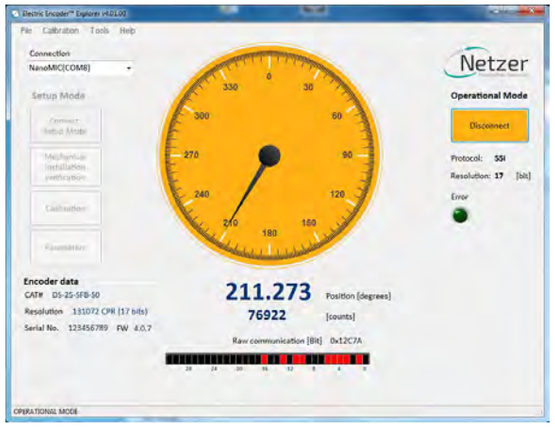

Protocol BiSS

10. Mechanical drawings

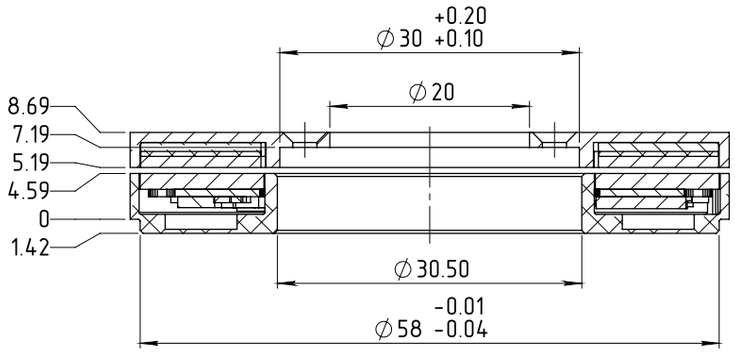

SECTION A-A

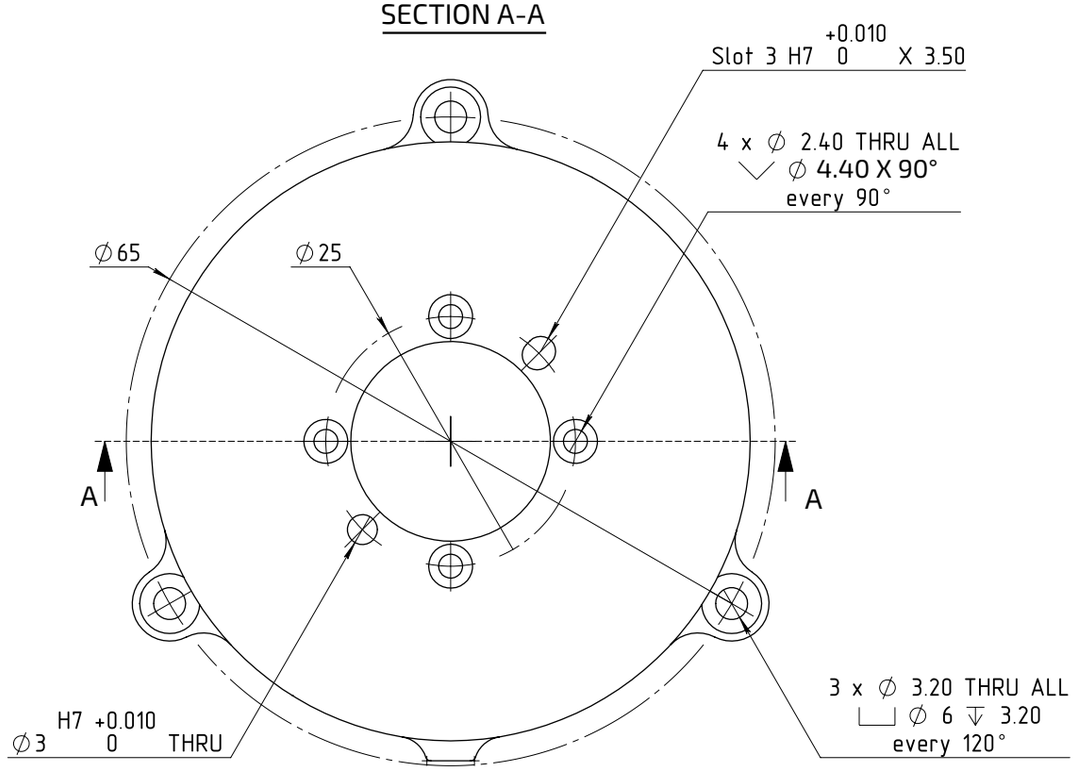

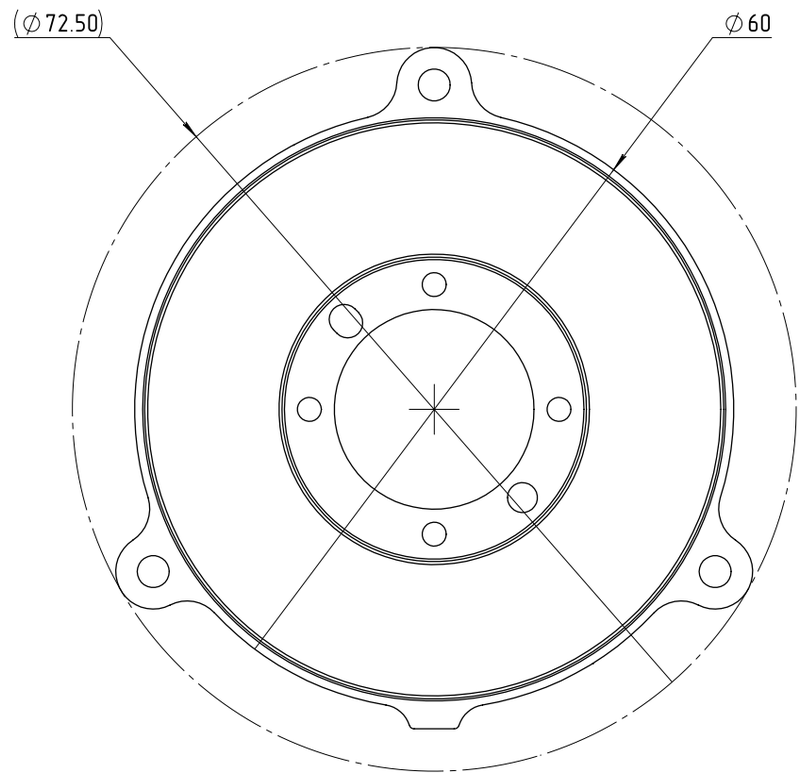

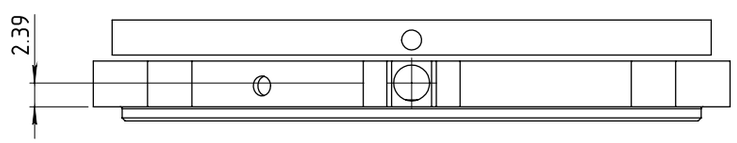

Unless Otherwise Specified	
Dimensions are in: mm	Surface finish: N6
Linear tolerances	
0.5-4.9: ±0.05 mm	5-30: ±0.1 mm
31-120: ±0.15 mm	121-400: ±0.2 mm

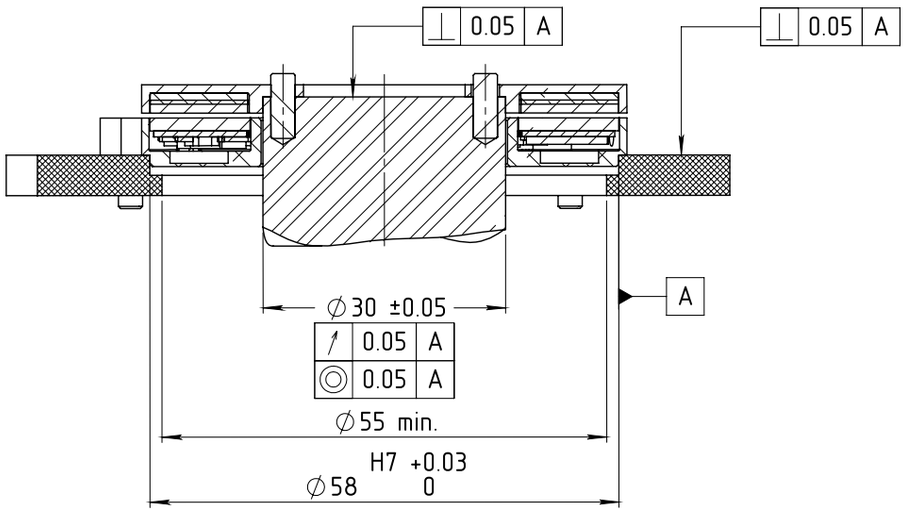

SECTION B-B

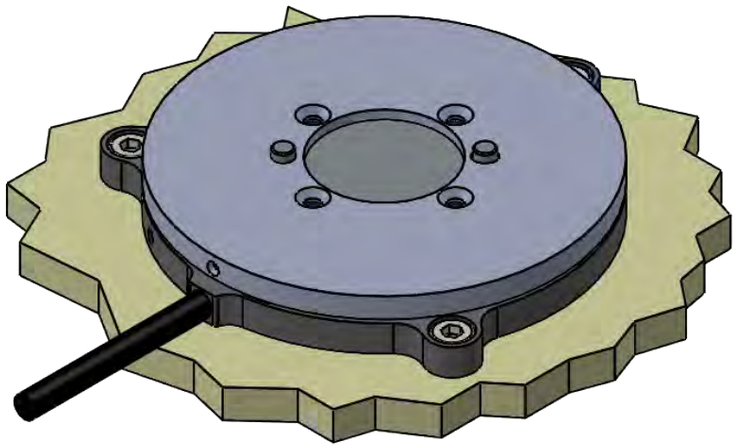

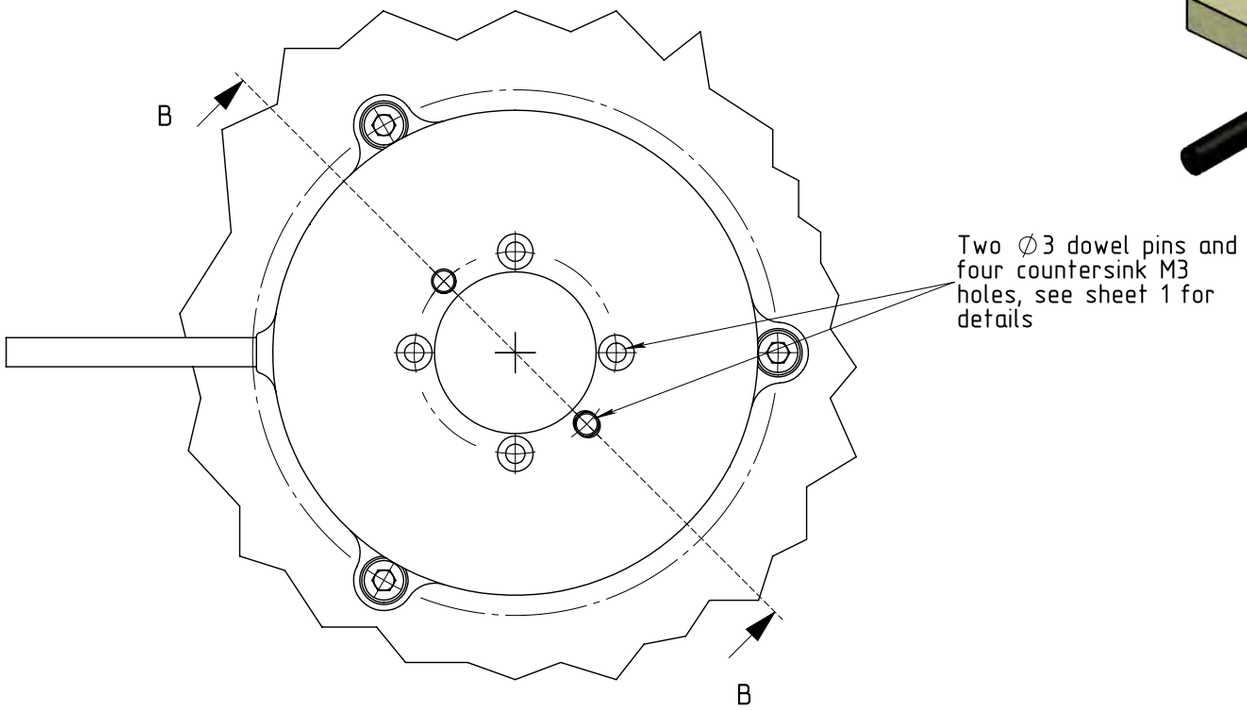

Unless Otherwise Specified	
Dimensions are in: mm	Surface finish: N6
Linear tolerances	
0.5-4.9: ±0.05 mm	5-30: ±0.1 mm
31-120: ±0.15 mm	121-400: ±0.2 mm