REVISIONS					
ZONE	REV.	DESCRIPTION	DATE	DRAWN	APPROVED

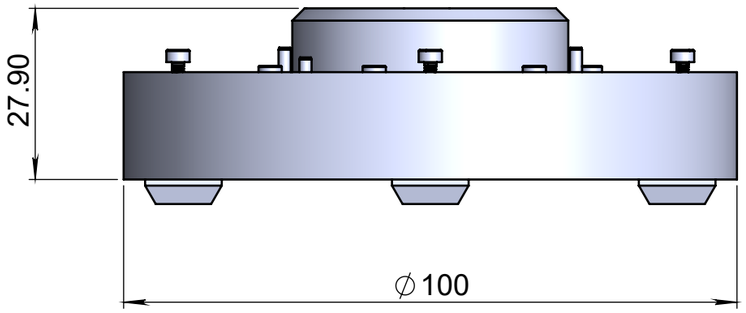

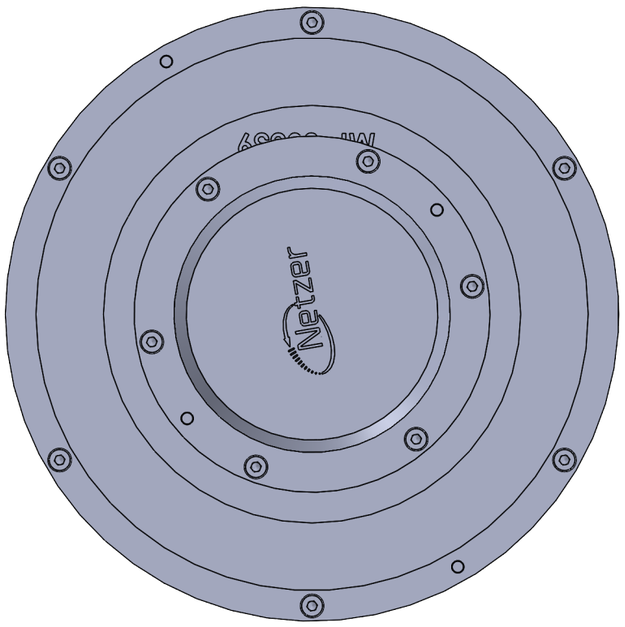

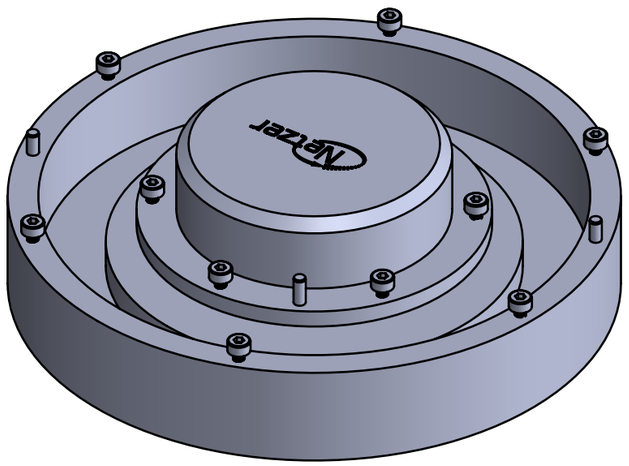

Notes:
1. For any incompatibility with the model or missing dimension, please refer to Netzer for clarification.
2. Burrs are not allowed.
3. Packing must prevent physical damage during process storage and shipment.

The information contaned in this drawing is the sole property ot Netzer Precision Position Sensors A.C.S. ltd. Any reproduction in part or whole without the written permission of Netzer Precision Position Sensors A.C.S. ltd. is prohibited. The drawing is confidential, and is the property of Netzer Precision ltd. It must not be disclosed to a third party without written consent of Netzer Precision ltd.

	NAME	SIGNATURE	DATE
DRAWN	Gal Horner	GH	17.07.2025
CHK'D			
APPV'D	Ron Nahmias	RN	17.07.2025

UNLESS OTHERWISE SPECIFIED:
DIMENSIONS ARE IN: mm
SURFACE FINISH: N6
0.5 - 4.9: ±0.05 mm
5 - 30: ±0.1 mm
31 - 120: ±0.15 mm
121 - 400: ±0.2 mm
401 - 1000: ±0.3 mm
1001 - 2000: ±0.5 mm
Between holes: ±0.05 mm
Angles: ±0.5°
Break sharp edges 0.1 x45°, inner radii R0.3 max

Netzer Precision Position Sensors A.C.S. ltd.

TITLE: VL-100 ROTATING JIG (RJ)

MATERIAL: ALUMINUM
Coating: See Note 3.
SCALE: 1:1

PROJECT : VL-100
Revision : 00
A3

CAT NO. : 14072025 RJ-VL-100
SHEET 1 OF 1