REVISIONS					
ZONE	REV.	DESCRIPTION	DATE	DRAWN	APPROVED

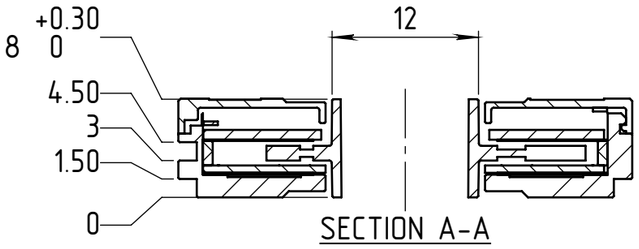

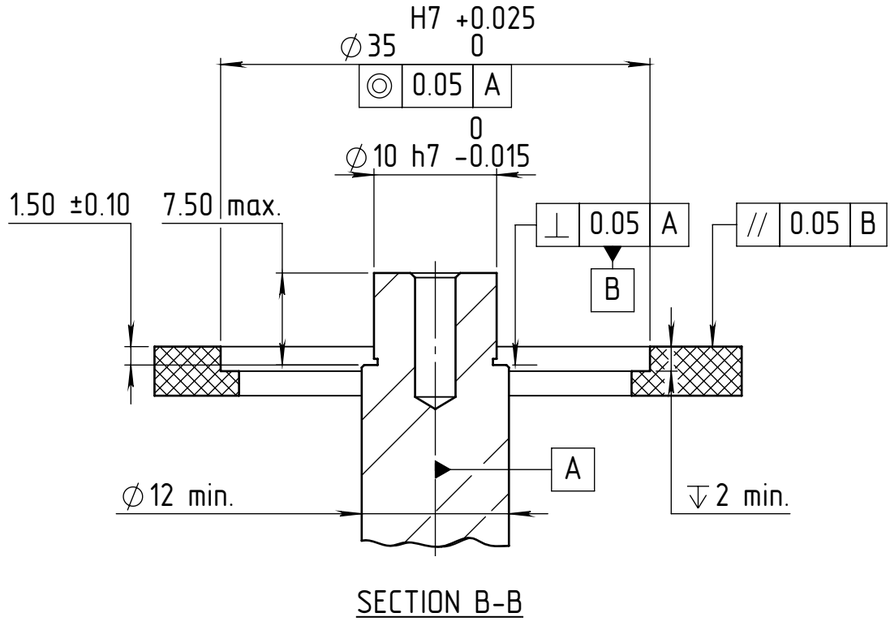

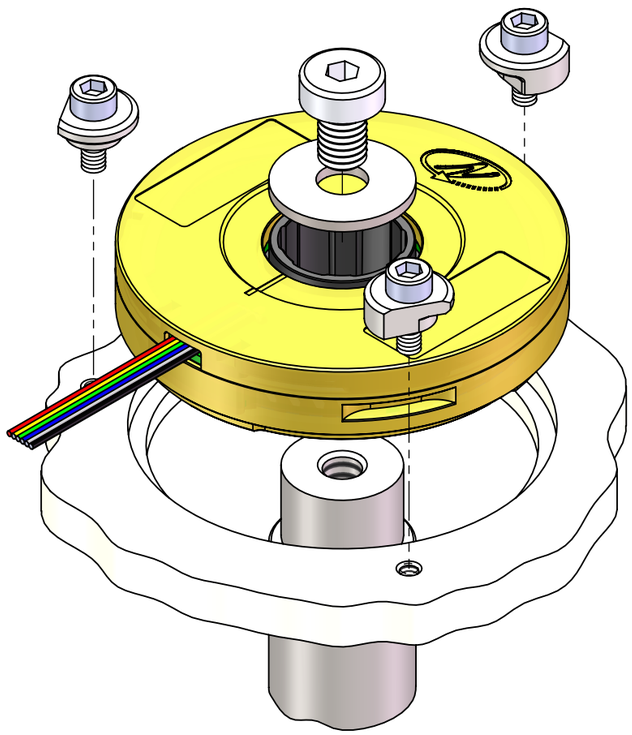

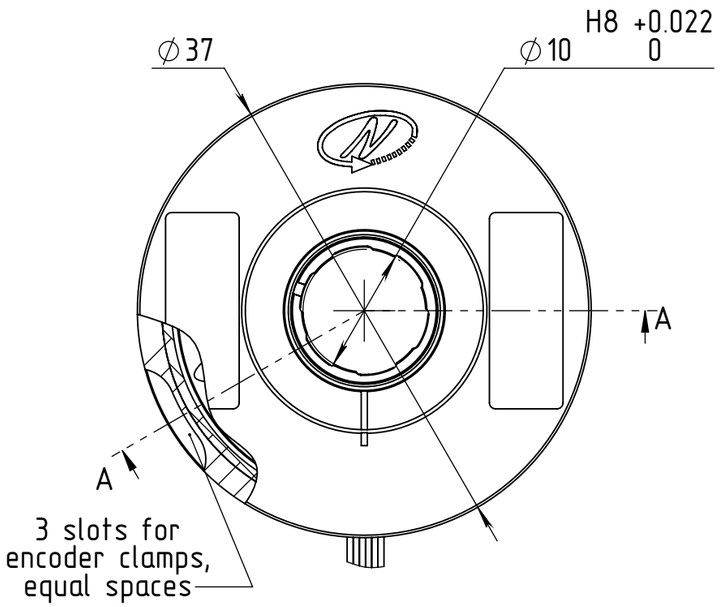

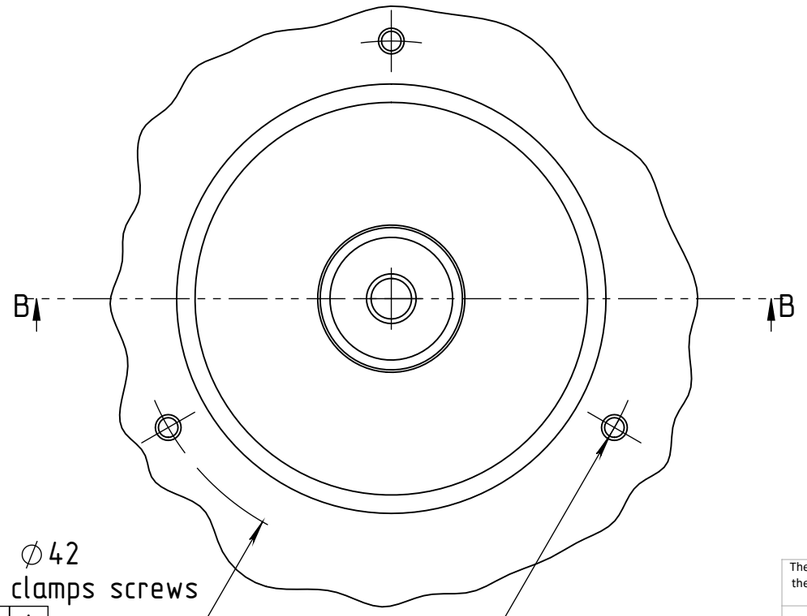

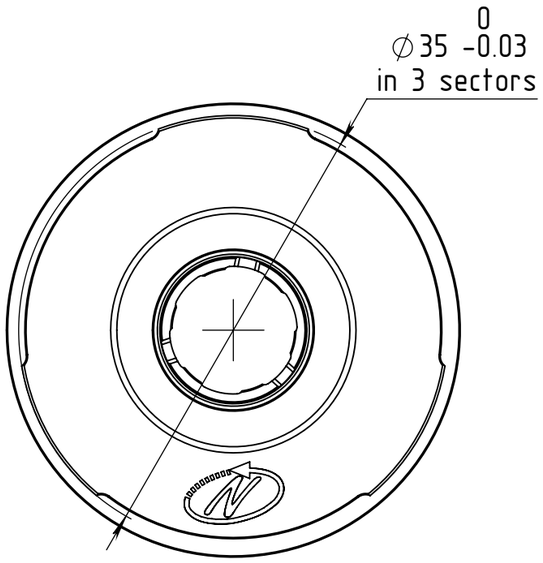

The information contaned in this drawing is the sole property ot Netzer Precision Position Sensors A.C.S. ltd. Any reproduction in part or whole without the written permission of Netzer Precision Position Sensors A.C.S. ltd. is prohibited. The drawing is confidential, and is the property of Netzer Precision ltd. It must not be disclosed to a third party without written consent of Netzer Precision ltd.

	NAME	SIGNATURE	DATE
DRAWN	Michael Agami	MA	11-May-2025
CHK'D			
APPV'D			

UNLESS OTHERWISE SPECIFIED:

DIMENSIONS ARE IN: mm	SURFACE FINISH: N6
0.5 - 4.9: ±0.05 mm	5 - 30: ±0.1 mm
31 - 120: ±0.15 mm	121 - 400: ±0.2 mm
401 - 1000: ±0.3 mm	1001 - 2000: ±0.5 mm
Between holes: ±0.05 mm	Angles: ±0.5°

On all edges make chamfer 0.1 mm x 45°

Netzer Precision Position Sensors A.C.S. ltd.

TITLE: DS-37 Mechanical ICD

MATERIAL:

Coating: Note 3

SCALE: 2:1

PROJECT : DS-37

Revision : 00

A3

CAT NO. : DS-37 ICD

SHEET 1 OF 1