The DL-66 is a member of the DL series of Electric Encoders™ a product line based on Netzer Precision Position Sensor proprietary technology. EE products are characterized by features that enable unparalleled performance:

- High resolution and unparalleled precision
- High tolerance to temperature extremes, shock, EMI, RFI and magnetic fields
- IP65
- Holistic signal generation
- Digital interfaces for absolute position
- Build-In Test and diagnostic (BIT)

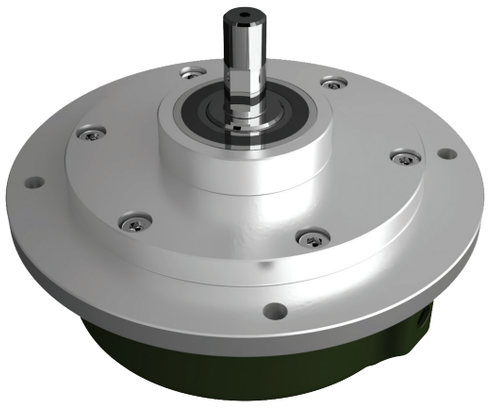

The holistic structure of the Electric Encoder™ makes it unique: Its output reading is the averaged outcome of the entire area of the rotor. This feature allows the EE a tolerant mechanical mounting and to deliver outstanding precision.

Due to the absence of components such as flexible couplers, glass discs, light sources and detectors along with very low power consumption enables the EE to deliver virtually failure-free performance in nearly all types of conditions.

The internally shielded, DC- operated EE includes an electric field generator, a field receiver, sinusoidal-shaped dielectric rotor, and processing electronics.

The EE output is a digital serial synchronous with absolute position single turn.

This combination of high precision, low profile and, low weight has made Netzer precision encoders highly reliable and particularly well suited to a wide variety of industrial automation and harsh environment applications.

General

Angular resolution	18-22 bit
Maximum tested static error	±0.010°
Extended accuracy static error	±0.005°
Maximum operational speed	4,000 rpm
Measurement range	Single turn, unlimited
Rotation direction	Adjustable CW/CCW*

* Default same direction from bottom side of the encoder

Mechanical

Starting torque	30×10^{-4} N.m
Shaft radial force (max)	100 N
Total weight	350gr
Outer diameter / Profile / Shaft	73/75 / 62/29 / 8 mm
Material (case, shaft)	Aluminum / Stainless steel

Electrical

Supply voltage	5VDC ± 5% (Optional 24 VDC)
Current consumption	90 mA
Interconnection	Shielded cable

Environmental

EMC	IEC 6100-6-2, IEC 6100-6-4
Operating temperature range	-40°C to +85°C
Storage temperature	-50°C to +100°C
Relative humidity	98% Non condensing
Shock endurance	220 g for 2 ms perpendicular to the shaft, 80 g for 2 ms parallel to the shaft.
Vibration endurance	According to MIL-STD-810C Method 516.2, procedure 8, curve W, sweep (5-500-5 Hz) at 15 minutes per axis
Protection	IP 65

Digital SSi Interface

Synchronous Serial Interface (SSI) is a point to point serial interface standard between a master (e.g. controller) and a slave (e.g. sensor) for digital data transmission.

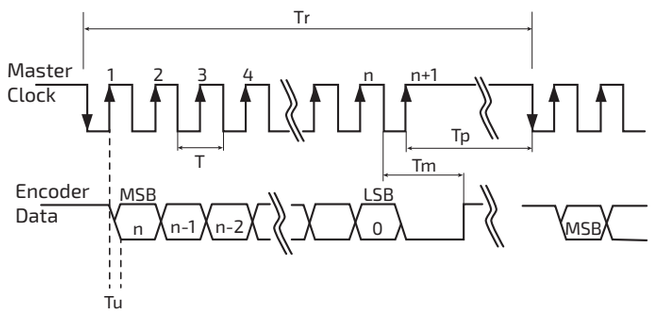

	Description	Recommendations
n	Total number of data bits	12 - 22
T	Clock period	
f= 1/T	Clock frequency	0.1 ÷ 5.0 MHz
Tu	Bit update time	200 nsec
Tp	Pause time	26 - ∞ µsec
Tm	Monoflop time	>25 µsec
Tr	Time between 2 adjacent requests	Tr > n*T+26 µsec
fr=1/Tr	Data request frequency	

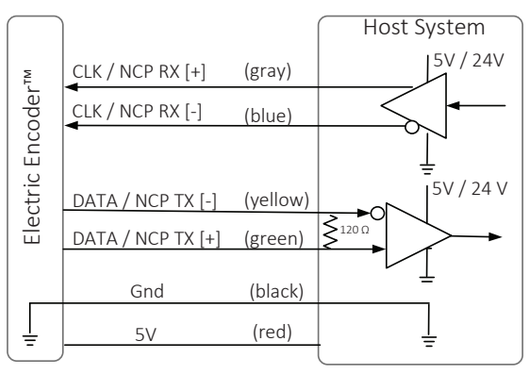

SSi / BiSS output signal parameters

Output code	Binary
Serial output	Differential RS-422
Clock	Differential RS-422
Clock frequency	0.1 ÷ 5.0 MHz
Position update rate	35 kHz (Optional - up to 375 kHz)

SSi / BiSS interface wires color code

Clock +	Grey	Clock
Clock -	Blue	
Data -	Yellow	Data
Data +	Green	
GND	Black	Ground
+5V	Red	Power supply

Software tools: (SSi / BiSS - C)

Advanced calibration and monitoring options are available by using the factory supplied Electric Encoder Explorer software. This facilitates proper mechanical mounting, offsets calibration and advanced signal monitoring.

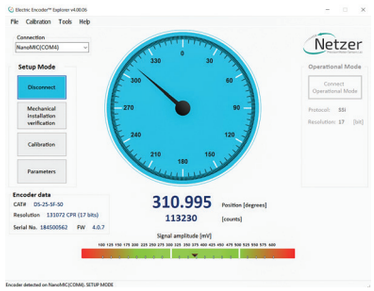

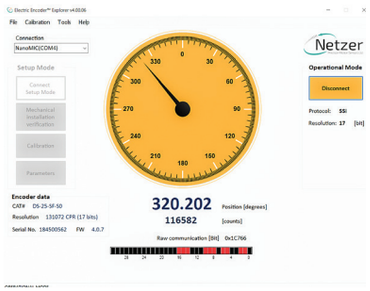

Digital BiSS-C Interface

BiSS – C Interface is unidirectional serial synchronous protocol for digital data transmission where the Encoder acts as "slave" transmits data according to "Master" clock. The BiSS protocol is designed in B mode and C mode (continuous mode). The BiSS-C interface as the SSi is based on RS-422 standards.

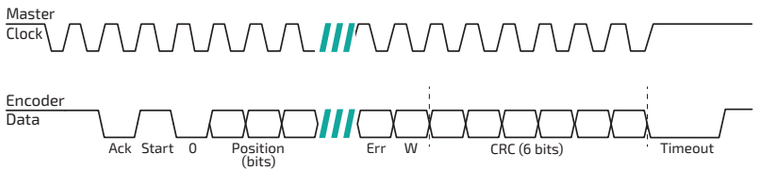

Bit #		Description	Default	Length
28	Ack	Period during which the encoder calculates the absolute position, one clock cycle	0	1/clock
27	Start	Encoder signal for "start" data transmit	1	1 bit
26	"0"	"Start" bit follower	0	1 bit
8...25	AP	Absolute Position encoder data		
7	Error	Error (amplitude levels)	1	1 bit
6	Warn.	Warning (non active)	1	1 bit
0...5	CRC	The CRC polynomial for position, error and warning data is: $x^6 + x^1 + x^0$. It is transmitted MSB first and inverted. The start bit and "0" bit are omitted from the CRC calculation.		6 bits
	Timeout	Elapse between the sequential "start"request cycle's.		25 µs

Ordering Code

DL - XXX - S G [ ] - S 0 - n n n

DL Product Line

Outer Diameter

25, 27, 66

Output

S	SSi
I	BiSS

Resolution

Code	bit	CPR
F	17	131,072
G	18	262,144
H	19	524,288
I	20	1048,578
J	21*	2,097,152
K	22*	4,194,304

DL-25, 27	17-21 bit
DL-66	18-22 bit

* SSi only

BIT (Built In Test): Optional

[ ]	None
B	BIT

EA	Extended Accuracy
nnn	Custom

Cable Length

0	250 mm Flying leads - 30AWG
1	500 mm Flying leads - 30AWG
2	750 mm Flying leads - 30AWG
3	1000 mm Flying leads - 30AWG
4	250 mm Flying leads - 28AWG
5	500 mm Flying leads - 28AWG
6	750 mm Flying leads - 28AWG
7	1000 mm Flying leads - 28AWG

To add a connector contact us

Cable Options

S	Jacket and shielded cable
C	Connector (D38999)

Cable Information

Cable: 30 AWG twisted pair(3):2 (30 AWG 25/44 finned copper, 0.15 PFE to Ø0.6 ± 0.05 OD).
Temperature rating: -60 to +150 Deg C.
Braided shield: Thinned copper braided 95% min. coverage.
Jacket: 0.45 silicon rubber jacket Ø3.45 ±0.2 OD

Pair #	Color
1	Red / Black
2	Gray / Blue
3	Green / Yellow

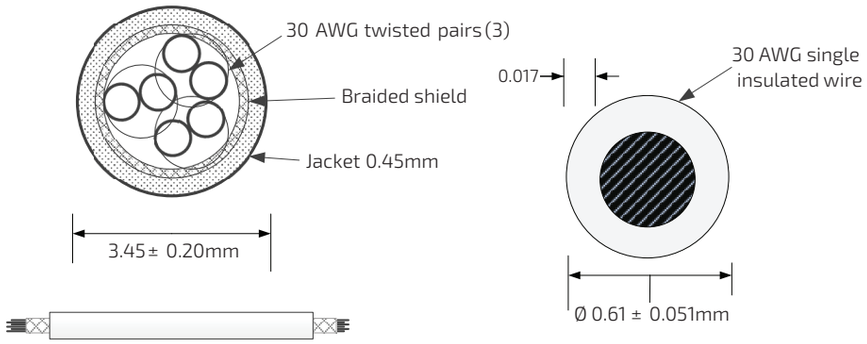

Cable

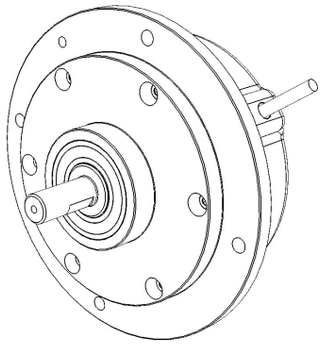

Connector

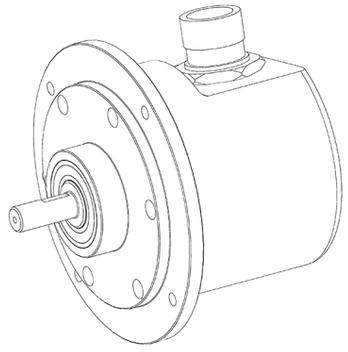

Pin #	Description
1	Clock +
2	Clock -
4	Data -
3	Data +
5	GND
6	+5 / 24 VDC

Connector : D38999 / 24WB35PN, D38999 / 24ZB35PN

ICD - Interconnection: Cable

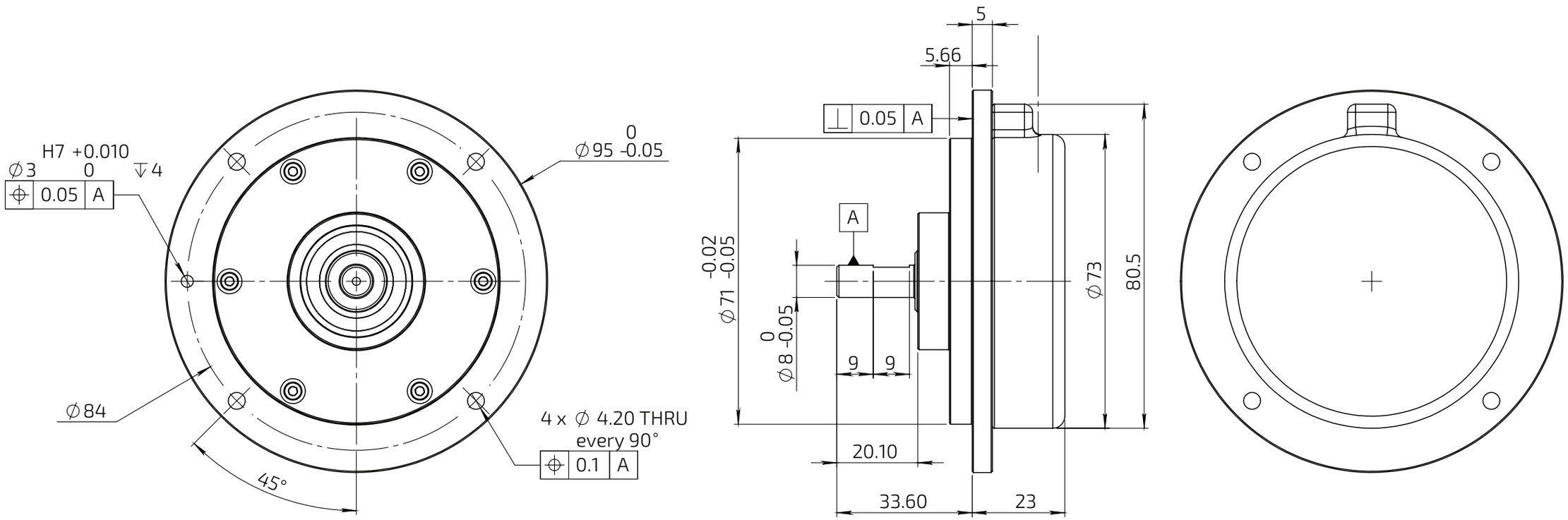

Unless Otherwise Specified	
Dimensions are in: mm	Surface finish: N6
Linear tolerances	
0.5-4.9: ±0.05 mm	5-30: ±0.1 mm
31-120: ±0.15 mm	121-400: ±0.2 mm

ICD - Interconnection: Connector

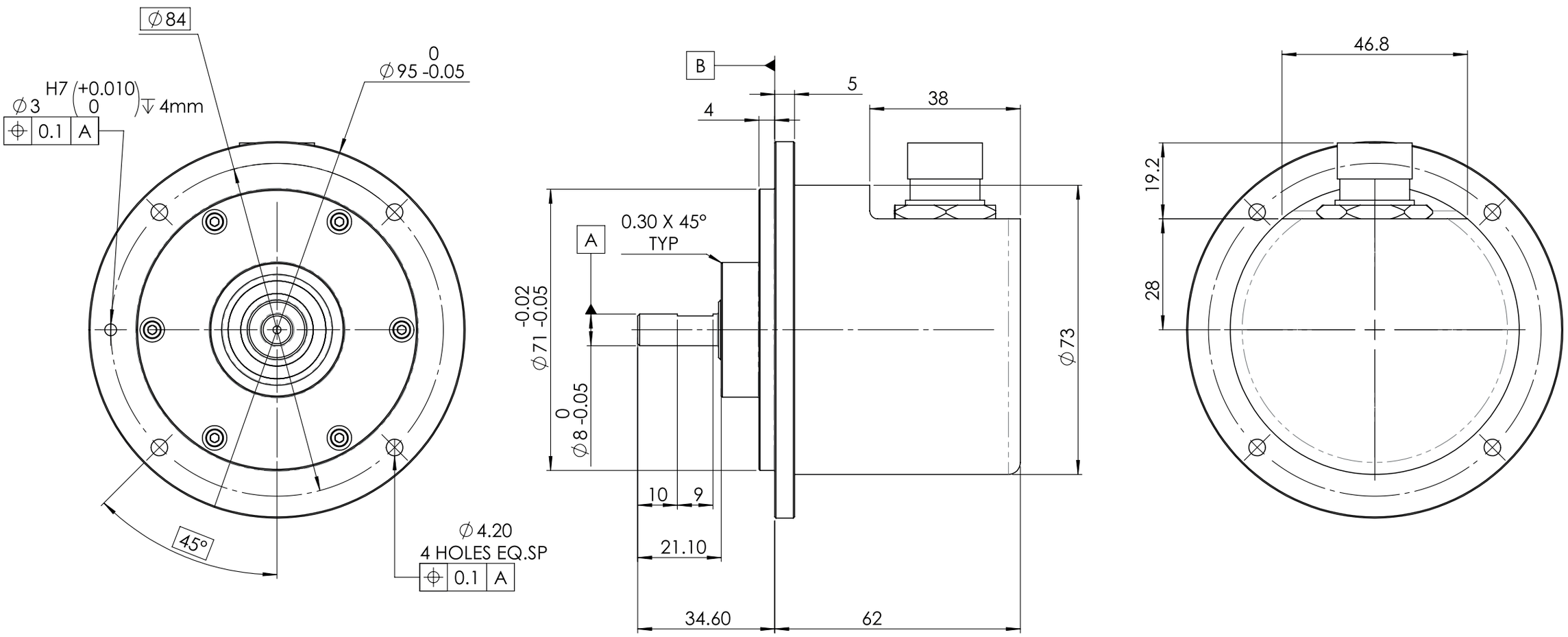

Unless Otherwise Specified	
Dimensions are in: mm	Surface finish: N6
Linear tolerances	
0.5-4.9: ±0.05 mm	5-30: ±0.1 mm
31-120: ±0.15 mm	121-400: ±0.2 mm